SYSTEM WIRING DIAGRAMS
Power Distribution Circuit (4 of 4)
1997 Chevrolet Suburban K1500
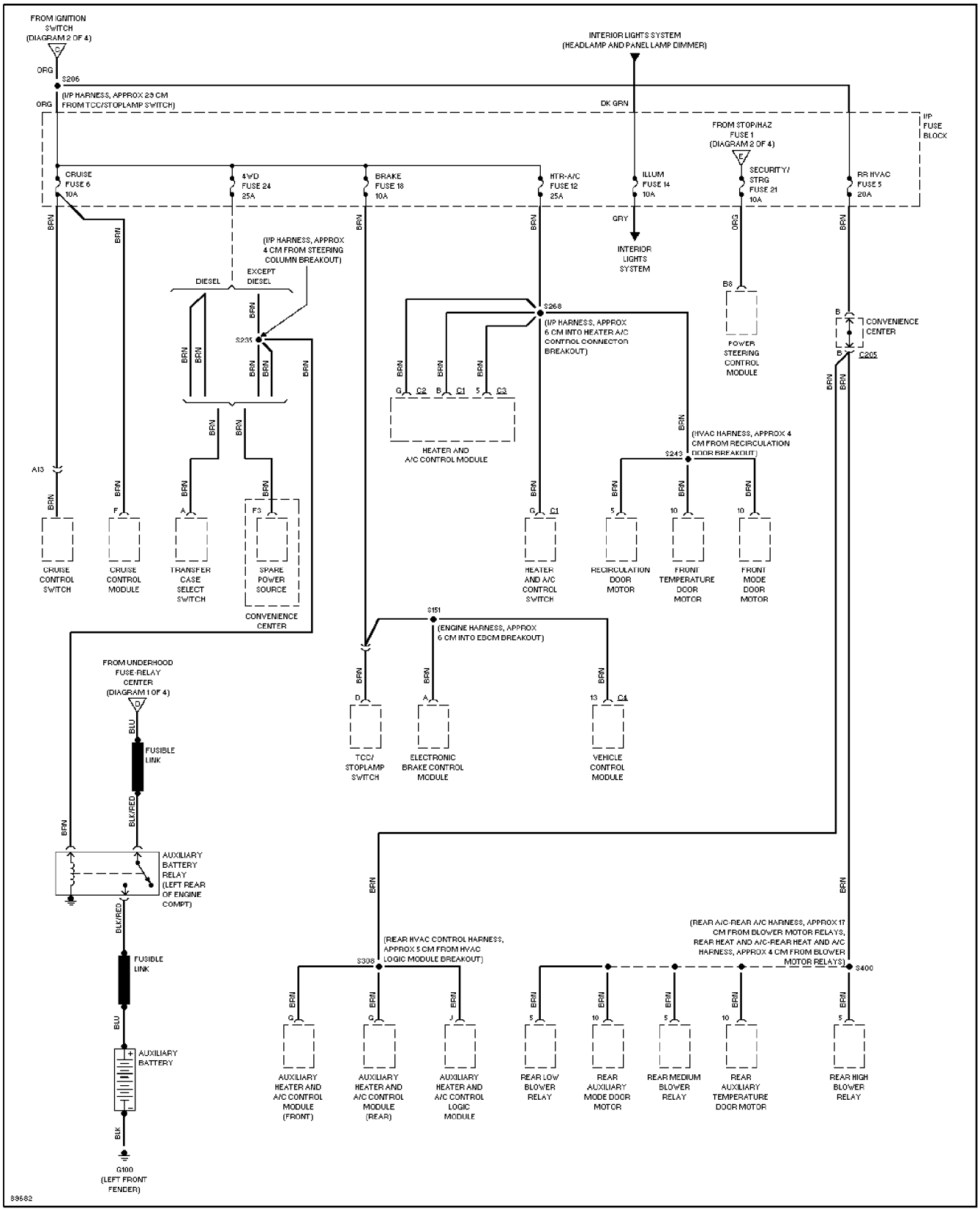
For DIAKOM-AUTO http://www.diakom.ru Taganrog support@diakom.ru (8634)315187
Copyright © 1998 Mitchell Repair Information Company, LLC
Monday, December 11, 2000 06:00PM